Raffaele D'Albenzio
Ivano Guardini
Telecom Italia Lab

Euro6IX network architecture proposals

This work is currently under discussion and has still not completely agreed by all the partners

RIPE 42
Amsterdam, May 2002

Euro6IX
IPv6:The New Internet

IST-2001-32161

TELECOM LAB ITALIA

Standard IX architecture and services

- **IX is a layer 2 infrastructure that can be:**
  - Locally based (e.g. placed in a single city and serving ISP installing one or more routers in the same build where IX is hosted by)
  - Wide spread (several points of presence interconnected via layer 2 wide area connections)

- **Standard IX services**
  - Establishment of BGP4+ peering among ISPs connected to Internet Exchanges

Two proposals about new role of IXs

- **Layer 3 IX providing Layer 3 wide area transport service**

- **Layer 3 IX assigning provider independent addresses**

Layer 3 IX

- **Layer 3 IXs**
  - Infrastructure providing both layer 2 and layer 3 interconnection service.
  - Several IXs can make direct peering offering also Wide Area Layer 3 transport as an Internet Service Provider. Every IXs will use an assigned xTLA prefix (x=p or s) to assign NLA prefixes to ISPs or customers connecting to the IX.
  - Project partners will use their xTLA prefix to assign NLA to experimental customers and regional ISP connecting to IX

Layer 3 IXs network architecture

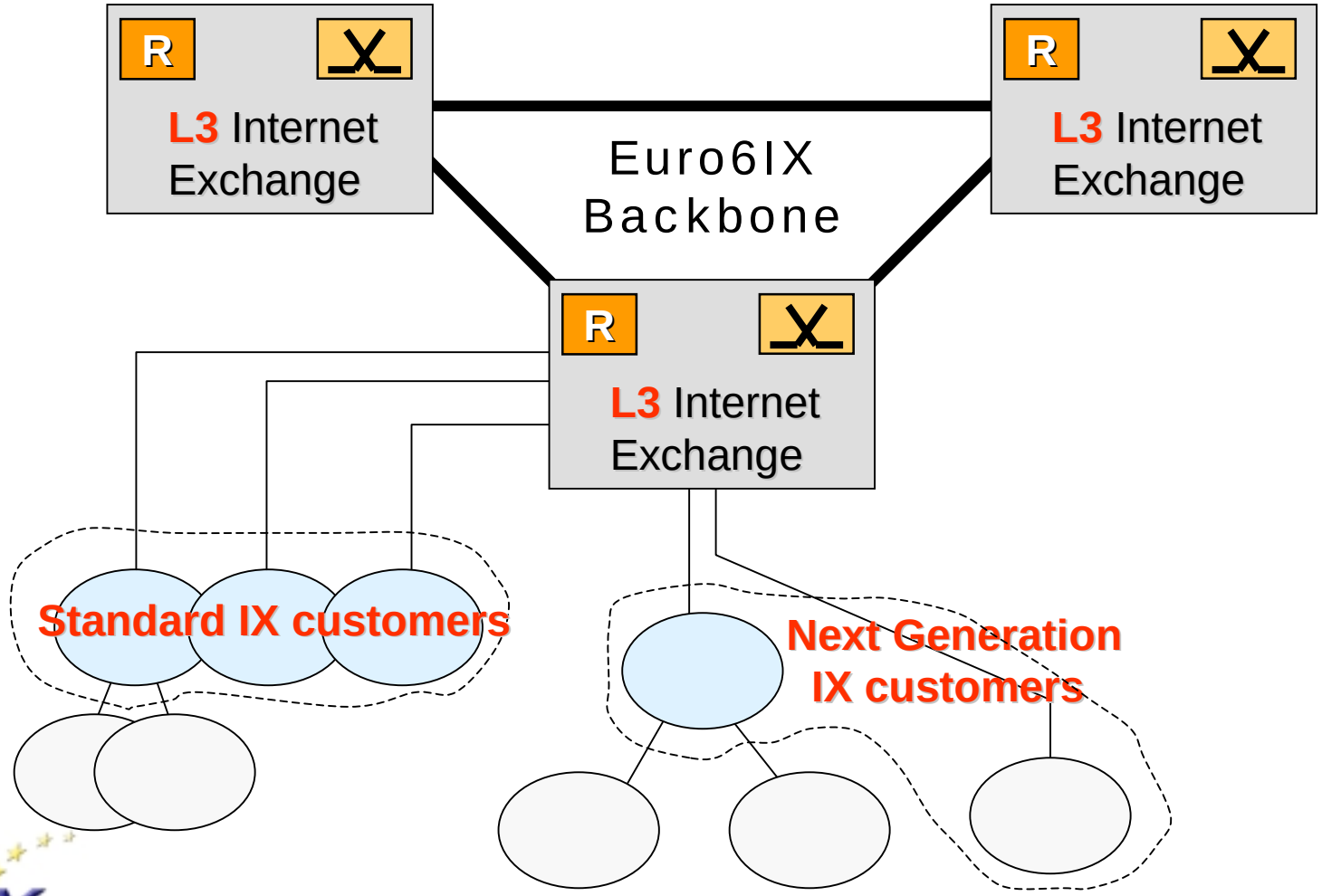

IXs assigning provider independent prefixes

- **Next generation IX services**
  - assignment of provider independent IPv6 addresses to the IX customers (i.e. regional ISPs or companies)
  - provision of a **L3 "mediation function"**
    - » the customer uses the addresses assigned by the IX and establishes a BGP4+ peering with the IX
    - » the customer buys the long-haul service from one (or more) of the long-haul providers connected to the IX
    - » the IX forwards the traffic generated by the customer only to the long-haul ISPs it subscribed with
    - » the return path is unpredictable (it is important?)
    - » proven (but to be better understood) advantages are
      - the possibility to change long-haul ISP without changing addresses
      - easier support for multihoming

Internet Exchange architecture

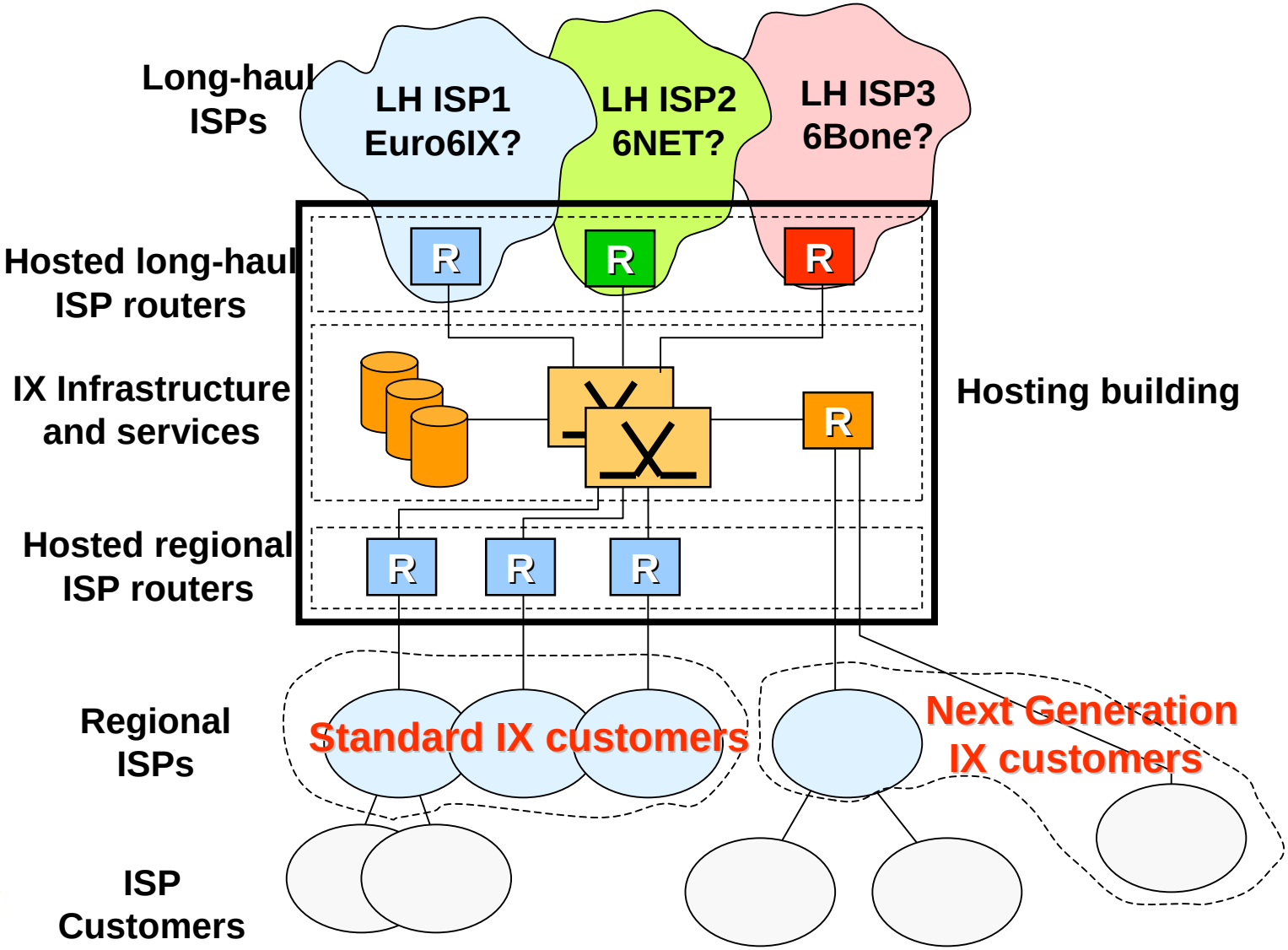

Address assignment to customers

- **Two options**
  1. IPv6 addresses assigned by the long-haul ISPs (e.g. Euro6IX)
  2. IPv6 addresses directly assigned by the IX

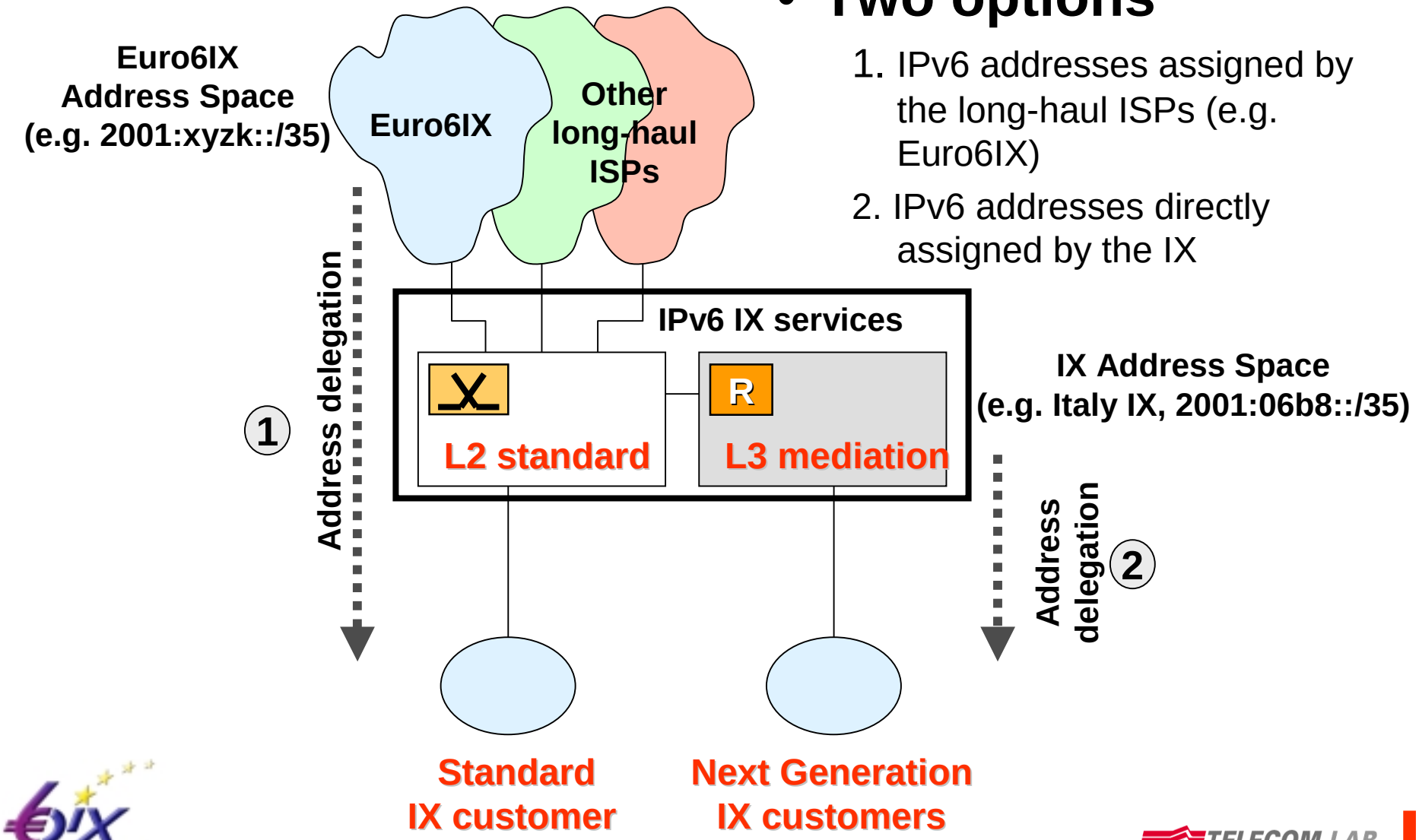

Routing

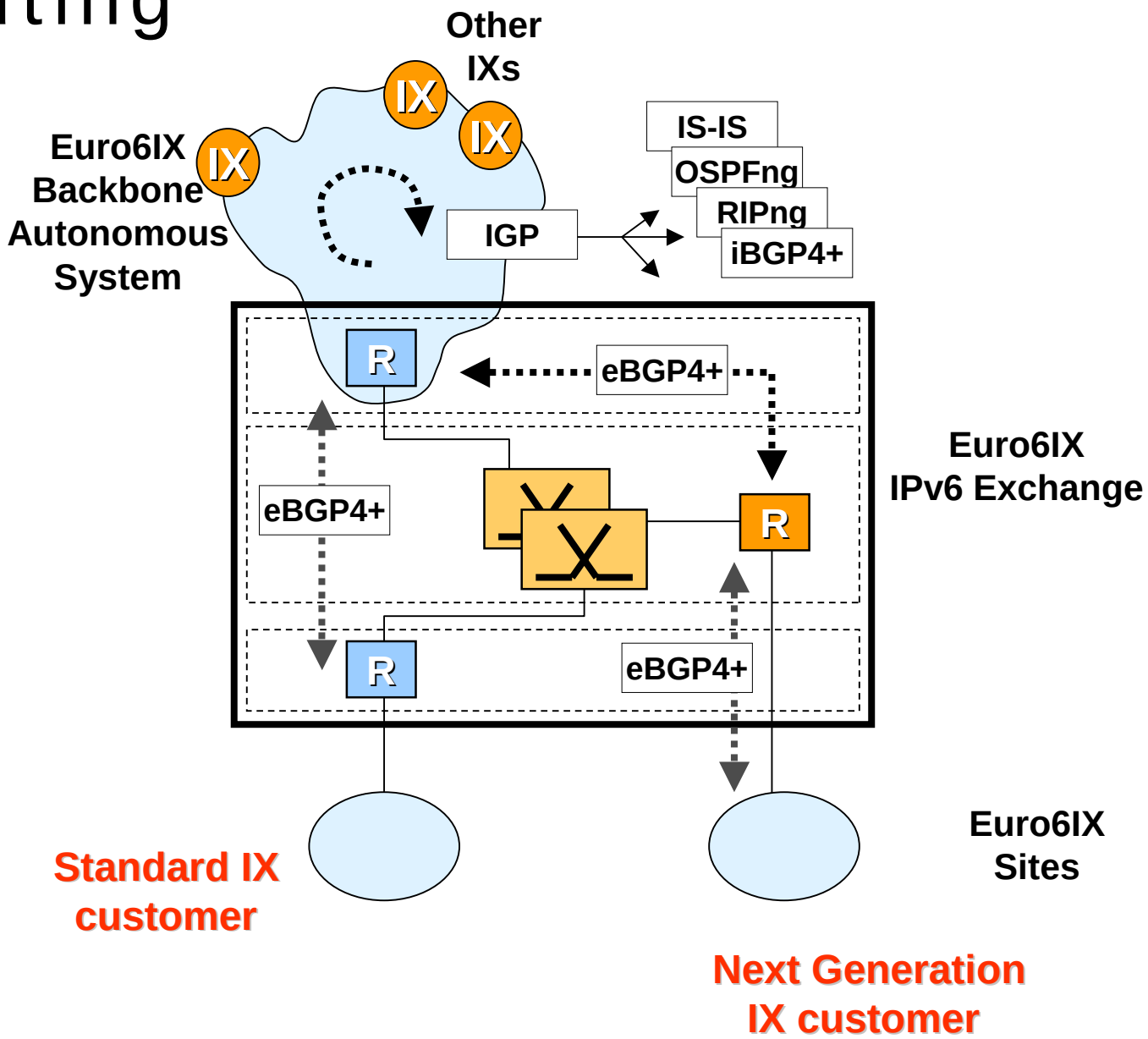
Other
IXs
IX
IX
IX
Euro6IX
Backbone
Autonomous
System
IS-IS
OSPFng
RIPng
iBGP4+
IGP
R
eBGP4+
eBGP4+
R
R
eBGP4+
Euro6IX
IPv6 Exchange
Standard IX
customer
Euro6IX
Sites
Next Generation
IX customer

Conclusions

- **Several options about role of IX will be considered in Euro6IX project**

- **Some of them require a prefix and an AS number for Euro6IX network and some other do not have this requirement**